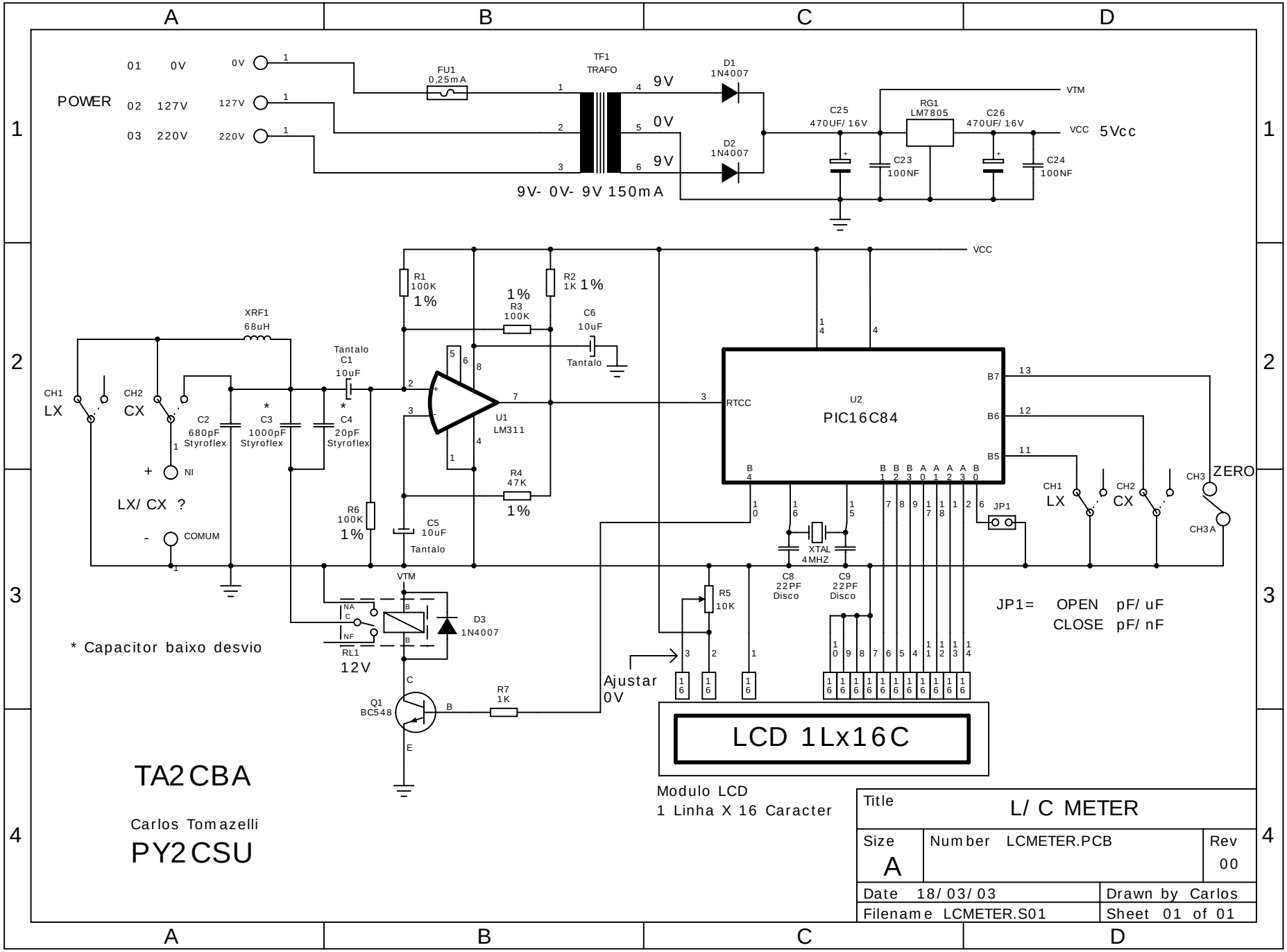
POWER
01 0V
02 127V
03 220V
FU1 0,25mA
TF1 TRAFO
D1 1N4007
D2 1N4007
9V
0V
9V
9V- 0V- 9V 150mA
C25 470UF/ 16V
C23 100NF
RG1 LM7805
C26 470UF/ 16V
C24 100NF
VTM
VCC
5Vcc
R1 100K 1%
R2 1K 1%
R3 100K 1%
C6 10uF Tantalo
XRF1 68uH
Tantalo C1 10uF
CH1 LX
CH2 CX
C2 680pF Styroflex
C3 1000pF Styroflex
C4 20pF Styroflex
NI
COMUM
LX/ CX ?
U1 LM311
R4 47K 1%
R6 100K 1%
C5 10uF Tantalo
U2 PIC16C84
RTCC
B7
B6
B5
XTAL 4MHZ
C8 22PF Disco
C9 22PF Disco
JP1
CH3 ZERO
CH3A
JP1= OPEN pF/ uF
CLOSE pF/ nF
R5 10K
Ajustar 0V
D3 1N4007
RL1 12V
Q1 BC548
R7 1K
* Capacitor baixo desvio
LCD 1Lx16C
Modulo LCD
1 Linha X 16 Caracter
TA2CBA
Carlos Tomazelli
PY2CSU
Title L/ C METER
Size A
Number LCMETER.PCB
Rev 00
Date 18/ 03/ 03
Drawn by Carlos
Filename LCMETER.S01
Sheet 01 of 01